DRAWINGS NOT TO SCALE!

William Gibbons
1182 CEDAR AVE.
ELGIN Il. 60120

MAST-TOP Utillity BRACKETS (2)
1/8" Thickness
6061-T6 Aluminum (NOT POLISHED)
WE WILL DRILL + PAINT

From Above

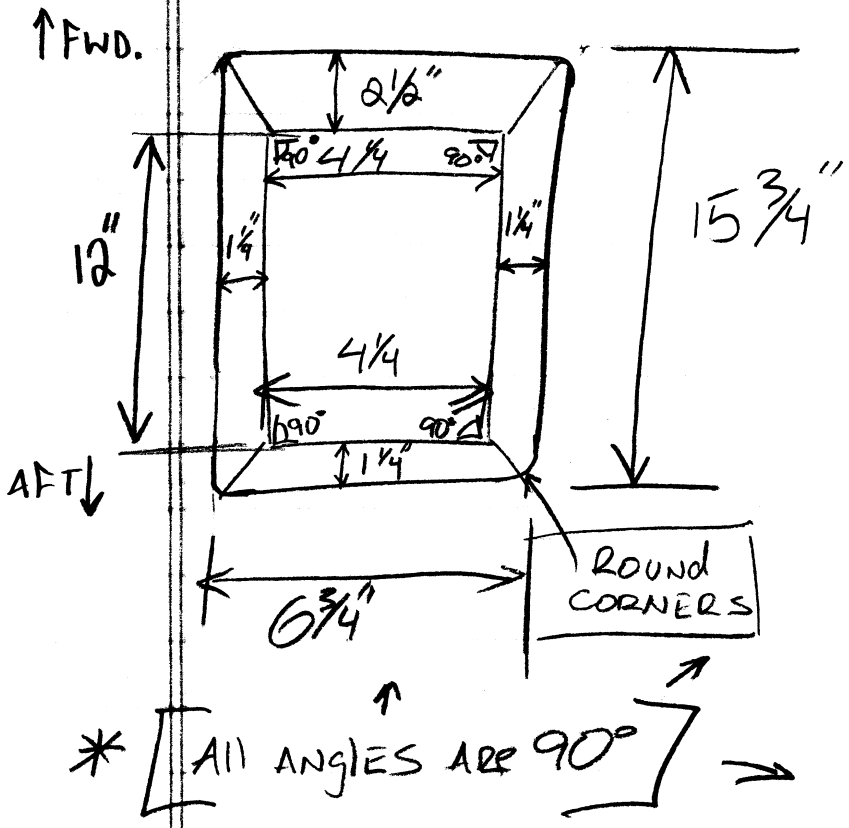

From Side

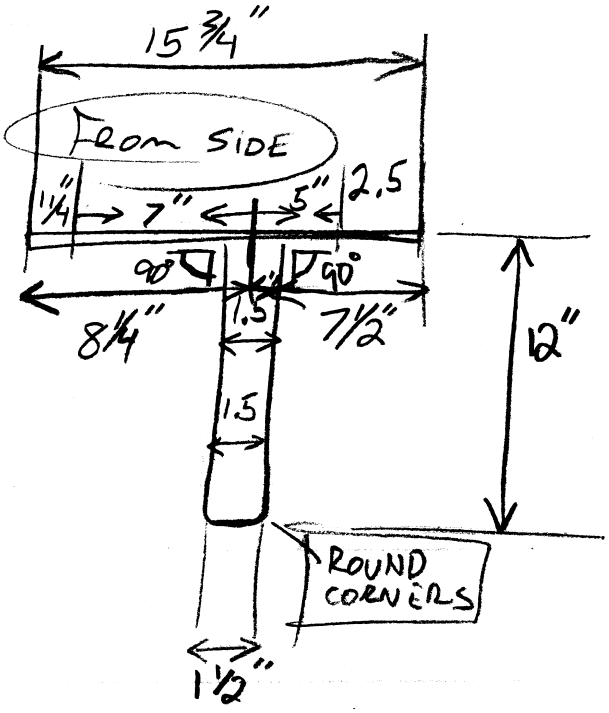

* [All ANGLES ARE 90°]

From Front

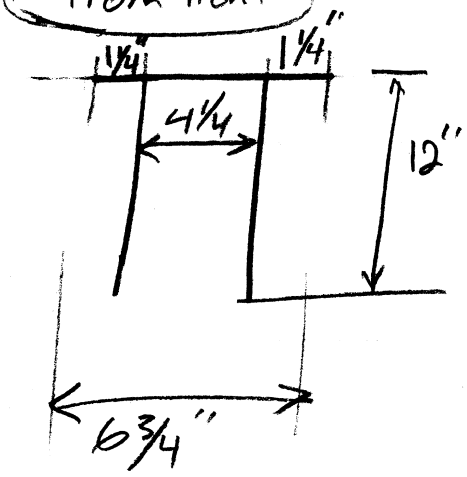

SMALL BRACKET FOR MIZZEN.
(Right angle bracket)

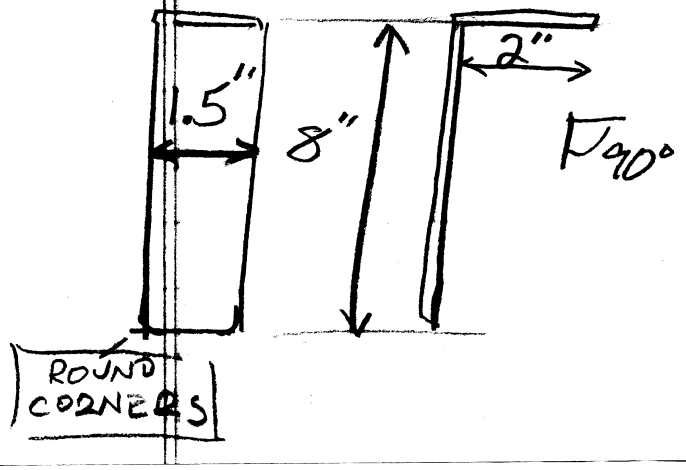

GIVE A CALL W/ANY QUESTIONS
847-697-4922
Thanks, Will